SCANSPEAK

Discovery

12 cm Midwoofer

12W/4524G00

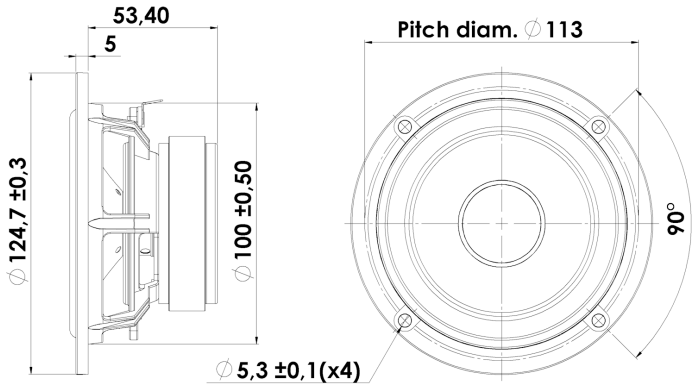

T-S Parameters:	
Resonance frequency [fs]	50 Hz
Mechanical Q factor [Qms]	3.35
Electrical Q factor [Qes]	0.30
Total Q factor [Qts]	0.27
Force factor [Bl]	4.4 Tm
Mechanical resistance [Rms]	0.57 kg/s
Moving mass [Mms]	6.1 g
Compliance [Cms]	1.67 mm/N
Effective diaph. diameter [D]	86 mm
Effective piston area [Sd]	59 cm²
Equivalent volume [Vas]	8.2 l
Sensitivity (2,83V/1m)	89 dB

Mechanical Data:	
Voice coil diameter	25 mm
Voice coil height	10 mm
Voice coil layers	2
Gap height	4 mm
Linear excursion	± 3 mm
Max mech. excursion	± 9 mm
Unit weight	1 kg
Cabinet Displacement Volume	0.12 l

Key Features:
Wide Operating Frequency Range
Suitable for 2-way or 3-way (as midrange)
Coated NRSC Fibre Glass Cone (patent)
Low Damping SBR Rubber Surround
Die cast Alu Chassis vented below spider

Electrical Data:	
Nominal impedance [Zn]	4 Ω
Minimum impedance [Zmin]	3.9 Ω
Maximum impedance [Zo]	30.8 Ω
DC resistance [Re]	3.1 Ω
Voice coil inductance [Le]	0.4 mH

Recommendations (please see Tech Note):	
Operating frequency range:	fs-5000 Hz
Cabinet volume - closed box:	N.a.
Cabinet volume - vented box:	Vbox=3 ltr, fb=69 Hz, f(-3dB)=77 Hz
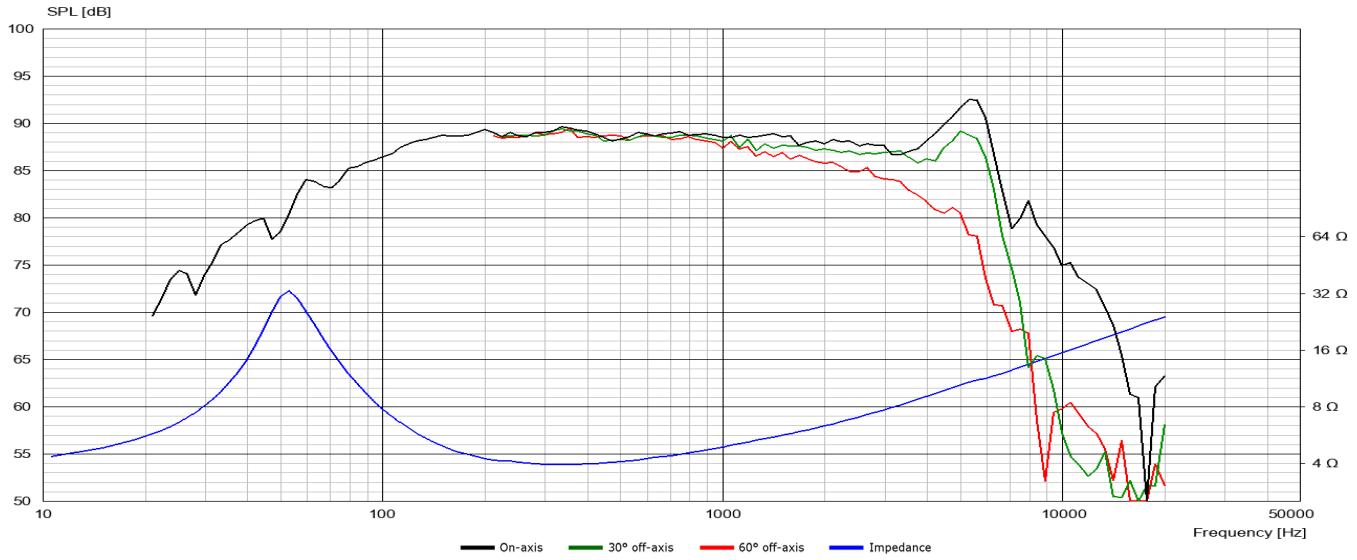
Power Handling:	
100h RMS noise test (IEC 18.4)	40 W
Long-term max power (IEC 18.2)	70 W
X-over: None